Home Automatic Washers

"CE" Approved Models

Refer to Page 3 for Model Numbers

Parts

Alliance Laundry Systems

www.comlaundry.com

Part No. 37986R2
September 2003

Table of Contents

Title	Page
Parts Ordering Information	2
Nameplate Location	2
Model Identification	3
Graphic Panel, Control Hood and Controls	4
Cabinet Top, Loading Door, Lid Lock and Shield	6
Out-of-Balance Switch	8
Motor, Mounting Bracket, Belt, Pump and Idler Assembly	10
Contactor Box, Relays, Transformer and Fuse Holders	12
Fuse Holders and Bracket	14
Inlet Hose, Fill Hose and Mixing Valve Mounting Bracket	16
Mixing Valve Assembly	18
Agitator, Drive Bell and Seal Kit, Washtub and Hub	20
Outer Tub, Cover and Pressure Hose	22
Transmission Assembly and Balance Ring	24
Transmission Assembly	26
Drain Hose and Siphon Break Kit	28
Bearing Housing, Brake, Pulley and Pivot Dome	30
Front Panel, Base Assembly and Cabinet Assembly	32
Mixing Valve and Motor Connection Blocks, Terminals and Terminal Extractor Tool	34
Power Cord and Terminals	36
Special Tools	38
Special Tools	40
Wire Harnesses and Wires	42
Parts Index	43

© Copyright 2003, Alliance Laundry Systems LLC

All rights reserved. No part of the contents of this book may be reproduced or transmitted in any form or by any means without the expressed written consent of the publisher.

Parts Ordering Information

If literature or replacement parts are required, contact the source from whom the machine was purchased or contact Alliance Laundry Systems at (920) 748-3950 for the name and address of the nearest authorized parts distributor.

For technical assistance, call (920) 748-3121.

Nameplate Location

When calling or writing about your product, be sure to mention model and serial numbers. Model and serial numbers are located on nameplate(s) as shown.

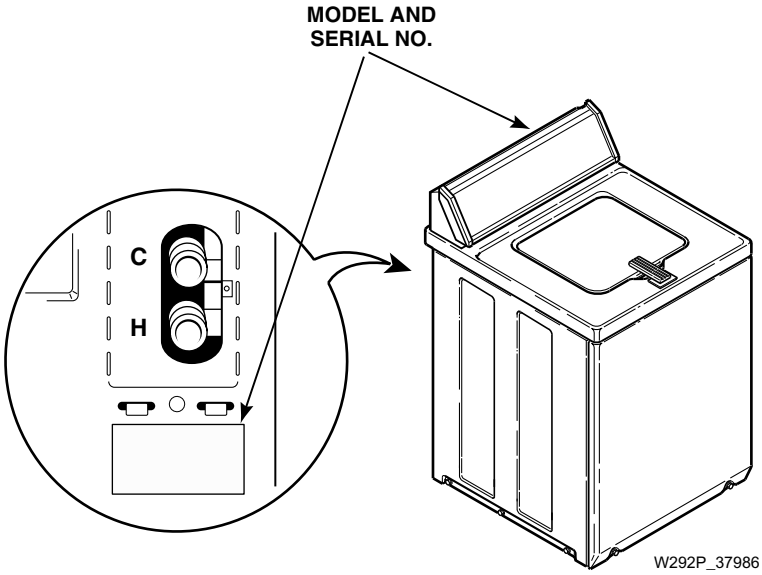

© Copyright, Alliance Laundry Systems LLC – DO NOT COPY or TRANSMIT

Model Identification

Information in this manual is applicable to these washer models:

AWC393*23059
NWC393*-3059
ZWC372*-3059
ZWC373*-3059

*** Add Letter To Designate Color. L - Almond W - White**

© Copyright, Alliance Laundry Systems LLC – DO NOT COPY or TRANSMIT

Notes

Graphic Panel, Control Hood and Controls

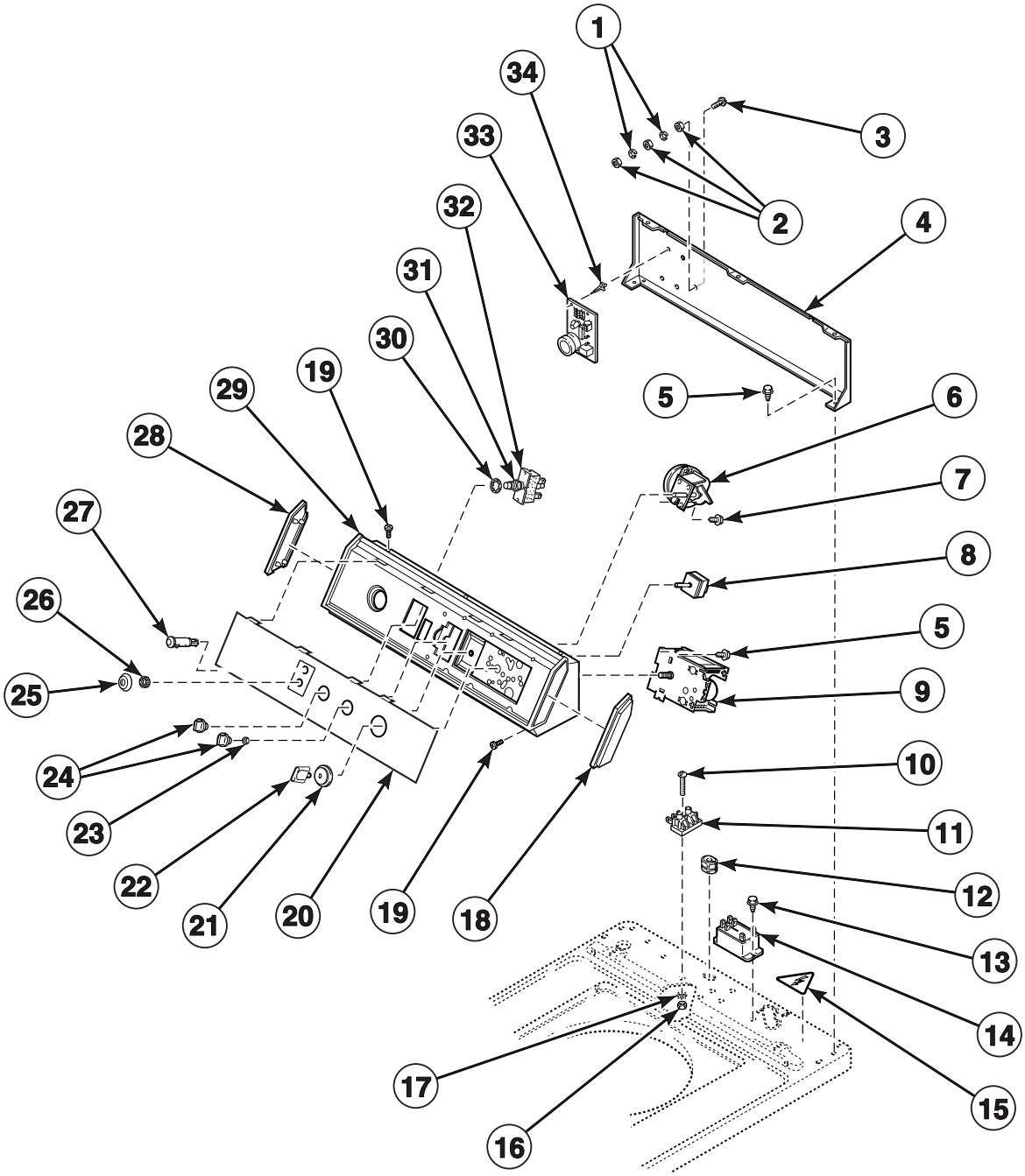

W293P_37986

© Copyright, Alliance Laundry Systems LLC – DO NOT COPY or TRANSMIT

Graphic Panel, Control Hood and Controls

REF	PART NO.	DESCRIPTION	COMMENTS
1	28449	Lockwasher	
2	28447	Nut	
3	28448	Screw	
4	37782	Control Hood Rear Panel	
5	23962	Screw	
6	39203	Pressure Switch	
7	31260	Screw	
8	21300	Temperature Switch	Through Serial No. 9511021616
	35115	Temperature Switch	Starting Serial No. 9511021617
9	36989	Timer	
10	Q6516	Screw	
11	36841	Terminal Block	
12	36957	Strain Relief	
13	501086	Screw	
14	502501	Relay	
15	502511	Sticker	
16	02788	Nut	
17	21734	Lockwasher	
18	31248	End Cap	Right
19	31752	Screw	Models AWC393*23059 and NWC393*-3059
	32993	Screw	Models ZWC372*-3059 and ZWC373*-3059
20	N/A	Graphic Panel	Model AWC393*23059
	N/A	Graphic Panel	Model NWC393*-3059
	N/A	Graphic Panel	Models ZWC372*-3059 and ZWC373*-3059
21	33817	Timer Knob Skirt	
22	33897	Timer Knob	Models AWC393*23059 and NWC393*-3059
	33898W	Timer Knob	Models ZWC372*-3059 and ZWC373*-3059
23	57584	Nut	Use with 21300 Switch
24	N/A	Control Knob	Models AWC393*23059 and NWC393*-3059
	33688	Control Knob	Models ZWC372*-3059 and ZWC373*-3059
25	N/A	Switch Collar	
26	24206	Knurled Nut	
27	36968	Indicator Light	
28	31249	End Cap	Left
29	31811	Control Hood Assembly	Models AWC393*23059 and NWC393*-3059; Through Serial No. 9511021616
	N/A	Control Hood Assembly	Models AWC393*23059 and NWC393*-3059; Starting Serial No. 9511021617
	N/A	Control Hood Assembly	Models ZWC372*-3059 and ZWC373*-3059; Through Serial No. 9511021616
	37845	Control Hood Assembly	Models ZWC372*-3059 and ZWC373*-3059; Starting Serial No. 9511021617
30	25820	Lockwasher	
31	52947	Nut	
32	55882	Push-To-Start Switch	
33	37269	Lid Lock Control	
34	501523	Support	

*** Add Letter To Designate Color. L - Almond W - White**

N/A = Part no longer available

© Copyright, Alliance Laundry Systems LLC – DO NOT COPY or TRANSMIT

Cabinet Top, Loading Door, Lid Lock and Shield

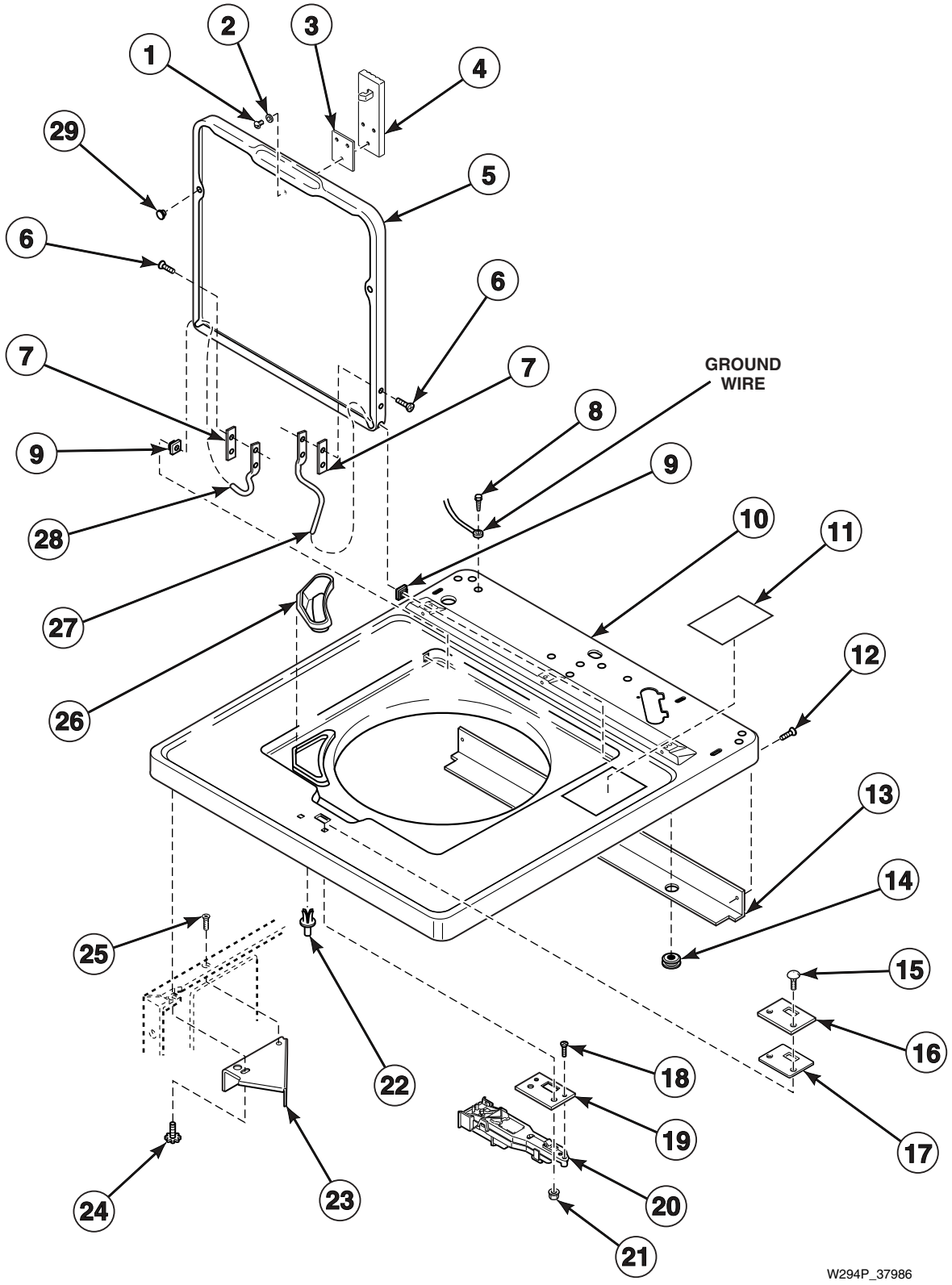

© Copyright, Alliance Laundry Systems LLC – DO NOT COPY or TRANSMIT

Cabinet Top, Loading Door, Lid Lock and Shield

REF	PART NO.	DESCRIPTION	COMMENTS
1	Q6695	Screw	
2	21643	Washer	
3	29677	Gasket	
4	29674	Latch	
5	33552*	Loading Door	
6	34337	Screw	
7	34338	Gasket	Through Serial No. 9511056682
8	52909	Screw	
9	33446	Bushing	
10	37071*	Cabinet Top	
11	36592	Sticker	
12	35527	Screw	Refer to *Special Tools* section for Torx Bit and Holder
13	39744	Shield	
14	80262	Grommet	
15	32184	Screw	
16	37828	Cover Plate	
17	30378	Gasket	
18	22649	Screw	
19	29676	Plate	
20	29678	Lid Lock	
21	22001	Nut	
22	56534	Support	
23	36034	Director Bracket	
24	33562	Screw	
25	N/A	Screw	
26	34776	Bleach Dispenser	
27	36437	Hinge	Right
28	36438	Hinge	Left
29	21685	Bumper	

*** Add Letter To Designate Color. L - Almond W - White**
N/A = Part no longer available

© Copyright, Alliance Laundry Systems LLC – DO NOT COPY or TRANSMIT

Out-of-Balance Switch

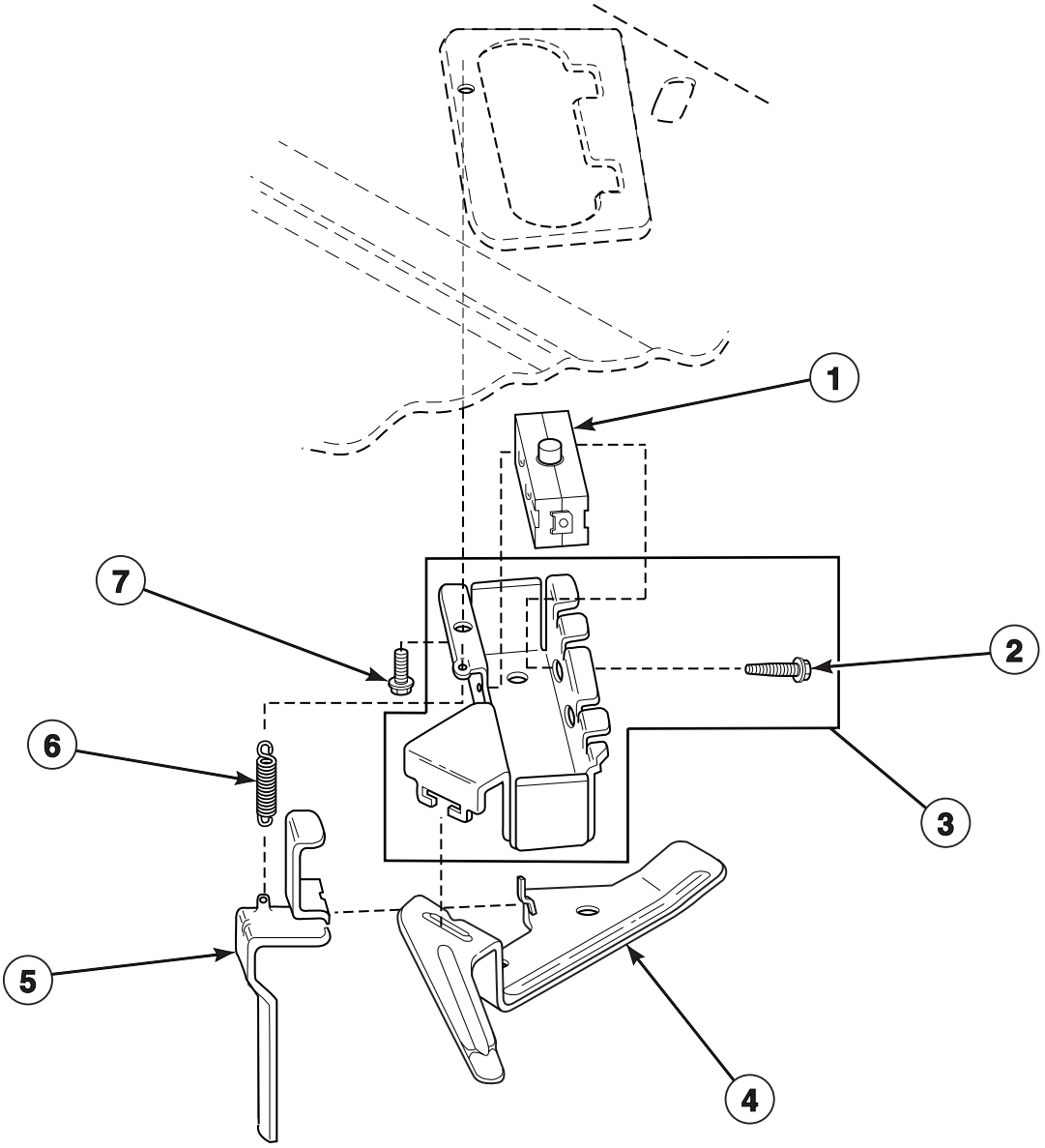

W295P_37986

© Copyright, Alliance Laundry Systems LLC – DO NOT COPY or TRANSMIT

Out-of-Balance Switch

REF	PART NO.	DESCRIPTION	COMMENTS
1	33445	Switch	
2	36510	Screw	
3	36497P	Switch Holder Kit	Includes 2 of item 2
4	33441	Actuator Arm	
5	33442	Lever	
6	33443	Spring	
7	23962	Screw	

© Copyright, Alliance Laundry Systems LLC – DO NOT COPY or TRANSMIT

Motor, Mounting Bracket, Belt, Pump and Idler Assembly

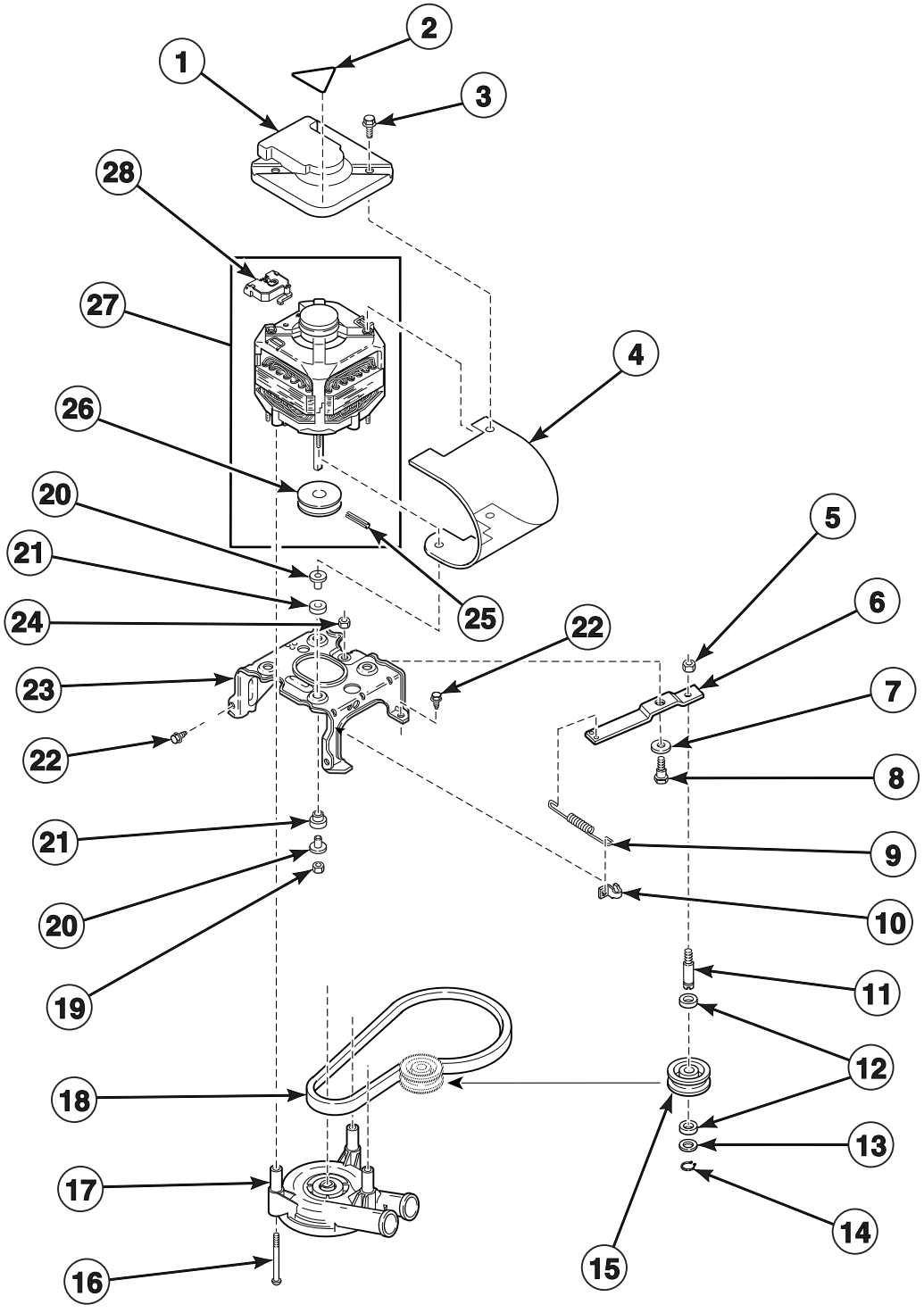

W249P_37986

© Copyright, Alliance Laundry Systems LLC – DO NOT COPY or TRANSMIT

Motor, Mounting Bracket, Belt, Pump and Idler Assembly

REF	PART NO.	DESCRIPTION	COMMENTS
1	34754	Motor Shield	
2	502506	Sticker	
3	36639	Screw	
4	36965	Motor Shield	
5	28803	Nut	
6	37443	Idler Lever	
7	81392	Washer	
8	27229	Shoulder Bolt	
9	37606	Idler Lever Spring	
10	28849	Clip	
11	28802	Idler Shaft	
12	29443	Washer	Felt
13	52549	Washer	Nylatron
14	23748	Retainer Ring	
15	28800	Idler Pulley	
16	34565	Screw	
17	36863	Pump Assembly	
18	35517	Belt	Agitate and Spin; 50 Hertz
19	35423	Nut	
20	34791	Motor Mount Post	
21	34788	Motor Mount	Rubber
22	503661	Screw	
23	N/A	Mounting Bracket	
24	52566	Nut	
25	N/A	Roll Pin	
26	N/A	Motor Pulley	
27	37058	Motor Assembly	One speed; 230 Volt; 50/60 Hertz
28	35632	Motor Switch	

N/A = Part no longer available

© Copyright, Alliance Laundry Systems LLC – DO NOT COPY or TRANSMIT

Contactor Box, Relays, Transformer and Fuse Holders

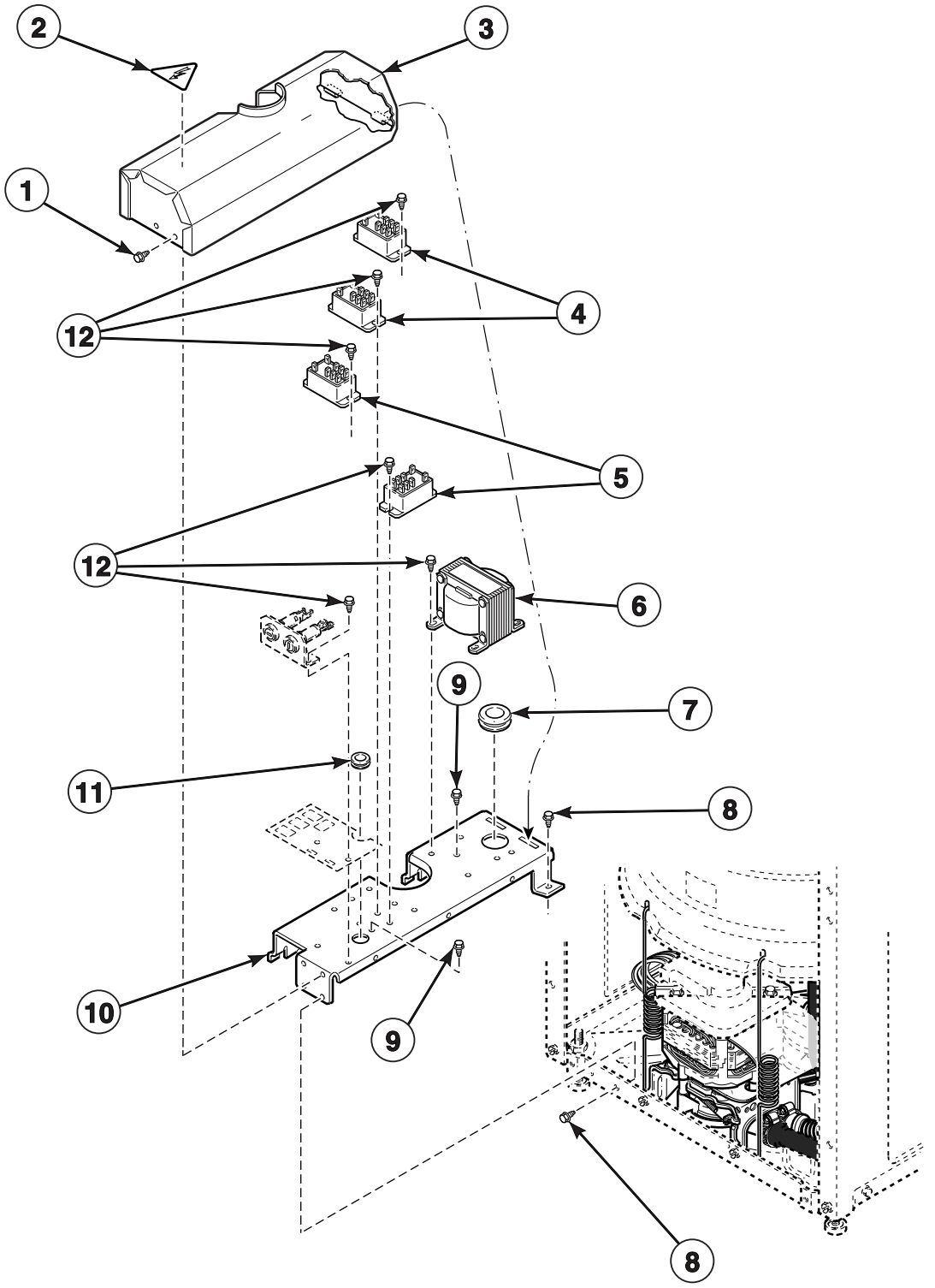

© Copyright, Alliance Laundry Systems LLC – DO NOT COPY or TRANSMIT

Contactor Box, Relays, Transformer and Fuse Holders

REF	PART NO.	DESCRIPTION	COMMENTS
1	52909	Screw	
2	502511	Sticker	
3	N/A	Contactor Box Cover	
4	502501	Relay	Normally open
5	37055	Relay	Normally open/Normally closed
6	M412477	Transformer	
7	N/A	Grommet	
8	503661	Screw	
9	20530	Screw	Ground
10	N/A	Contactor Box Base	
11	80262	Grommet	
12	501086	Screw	

N/A = Part no longer available

© Copyright, Alliance Laundry Systems LLC – DO NOT COPY or TRANSMIT

Fuse Holders and Bracket

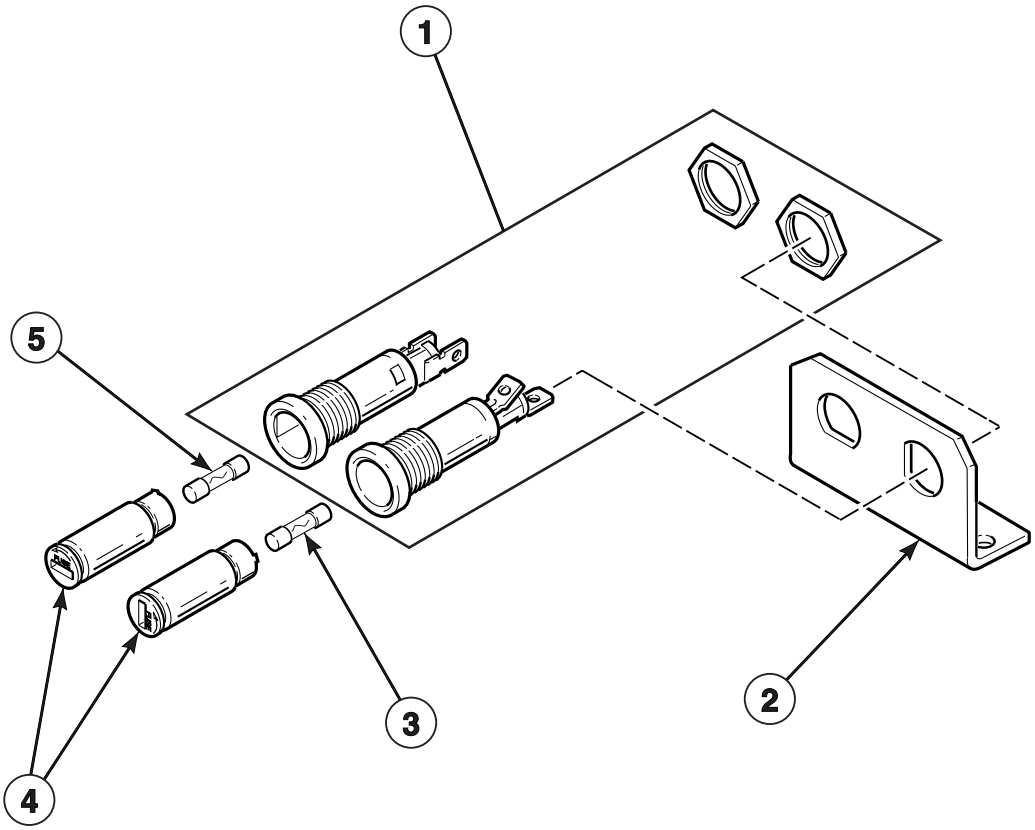

W297P_37986

© Copyright, Alliance Laundry Systems LLC – DO NOT COPY or TRANSMIT

Fuse Holders and Bracket

REF	PART NO.	DESCRIPTION	COMMENTS
1	502591	Fuse Holder Body	
2	502589	Bracket	
3	502592	Fuse	Secondary; 3.15 Amp
4	502811	Fuse Holder Cap	
5	502593	Fuse	Primary; 400 MA

© Copyright, Alliance Laundry Systems LLC – DO NOT COPY or TRANSMIT

Inlet Hose, Fill Hose and Mixing Valve Mounting Bracket

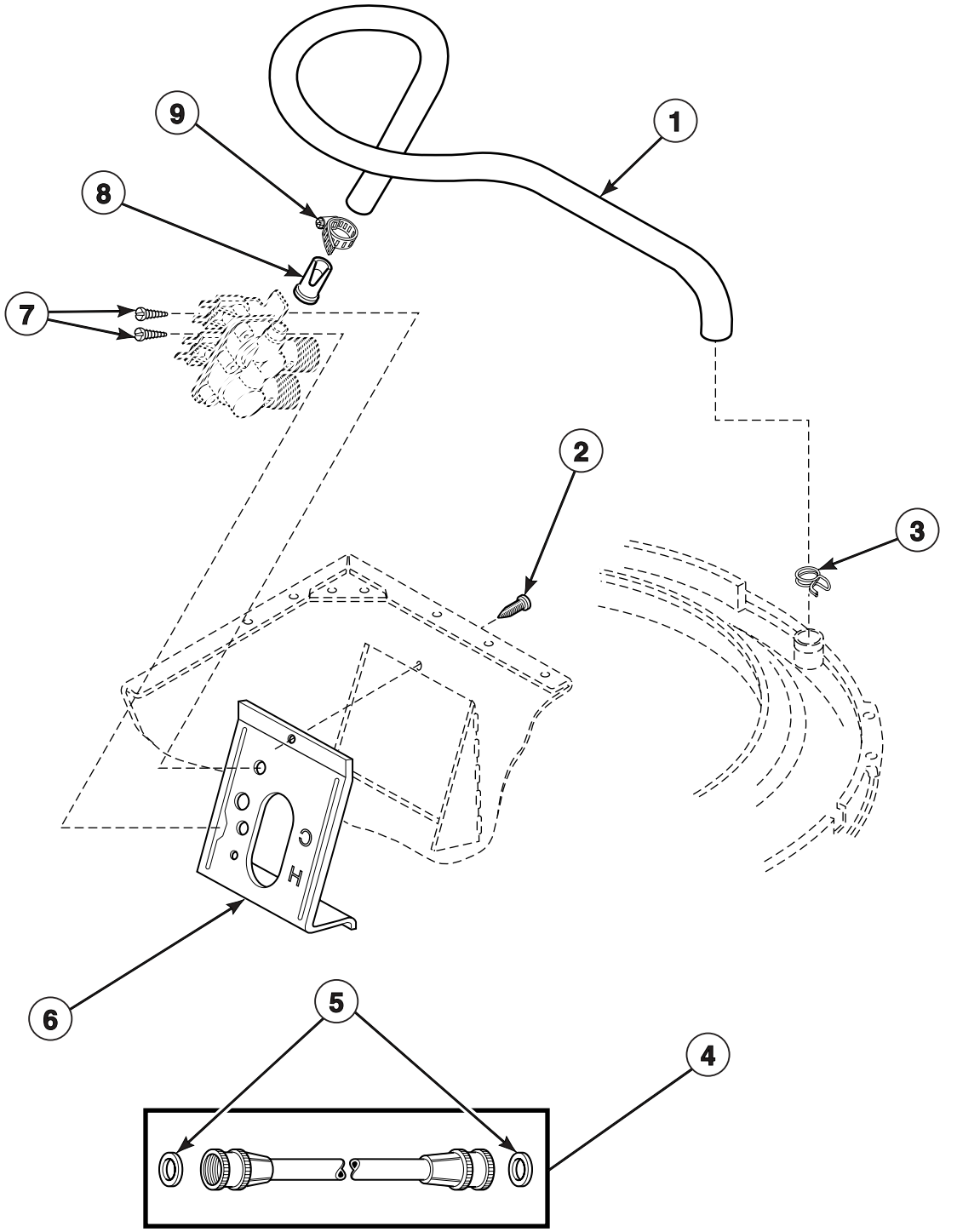

TLW1462P_37986

© Copyright, Alliance Laundry Systems LLC – DO NOT COPY or TRANSMIT

Inlet Hose, Fill Hose and Mixing Valve Mounting Bracket

REF	PART NO.	DESCRIPTION	COMMENTS
1	38155	Fill Hose	
2	33562	Screw	
3	29210	Hose Clamp	Gold
4	38349P	Inlet Hose Assembly	Four foot; Hoses are equipped with one metric hose coupling and one standard hose coupling
	37380	Inlet Hose Assembly	Eight foot; Hoses are equipped with one metric hose coupling and one standard hose coupling
	37381	Inlet Hose Assembly	Ten foot; Hoses are equipped with one metric hose coupling and one standard hose coupling
5	20290	Hose Washer	
6	39407	Mixing Valve Mounting Bracket	
7	501086	Screw	
8	34500	Backflow Preventer	
9	36801	Hose Clamp	

© Copyright, Alliance Laundry Systems LLC – DO NOT COPY or TRANSMIT

Mixing Valve Assembly

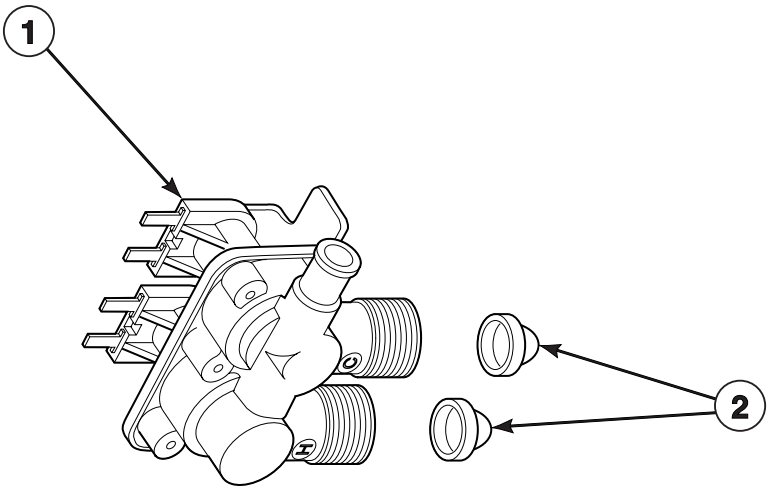

W284P_37986

© Copyright, Alliance Laundry Systems LLC – DO NOT COPY or TRANSMIT

Mixing Valve Assembly

REF	PART NO.	DESCRIPTION	COMMENTS
1	37061	Mixing Valve Assembly	
2	F270200	Inlet Screen	

© Copyright, Alliance Laundry Systems LLC – DO NOT COPY or TRANSMIT

Agitator, Drive Bell and Seal Kit, Washtub and Hub

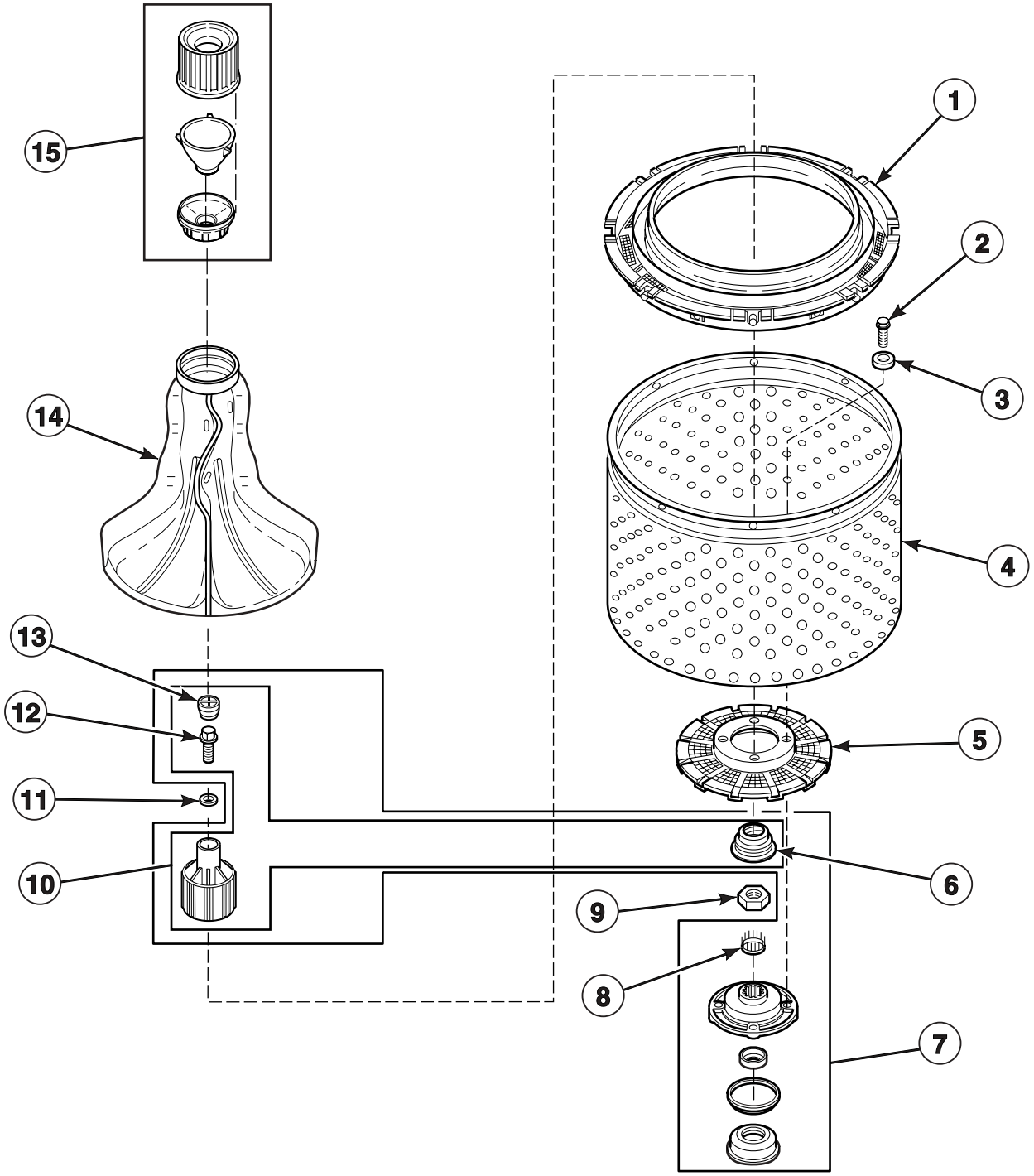

W299P_37986

© Copyright, Alliance Laundry Systems LLC – DO NOT COPY or TRANSMIT

Agitator, Drive Bell and Seal Kit, Washtub and Hub

REF	PART NO.	DESCRIPTION	COMMENTS
1	35035	Clothes Guard	
2	27202	Cap Screw	
3	28094	Gasket	
4	39240P	Washtub	Model ZWC372*-3059; White Porcelain
	719P3	Washtub	All other models ; Stainless Steel
5	39371	Lint Filter	
6	36425	Seal	
7	495P3A	Hub and Seal Kit	Includes 32857 Cover Gasket and item 10; Does not include 27615P Sealant
8	29728	Splined Insert	
9	29220	Locknut	
10	39508	Drive Bell	Includes items 6, 12 and 13
11	36472	O-Ring	
12	36511	Plug	
13	39432	Shoulder Screw	
14	33174	Agitator	
15	36542	Fabric Softener Dispenser	

© Copyright, Alliance Laundry Systems LLC – DO NOT COPY or TRANSMIT

Outer Tub, Cover and Pressure Hose

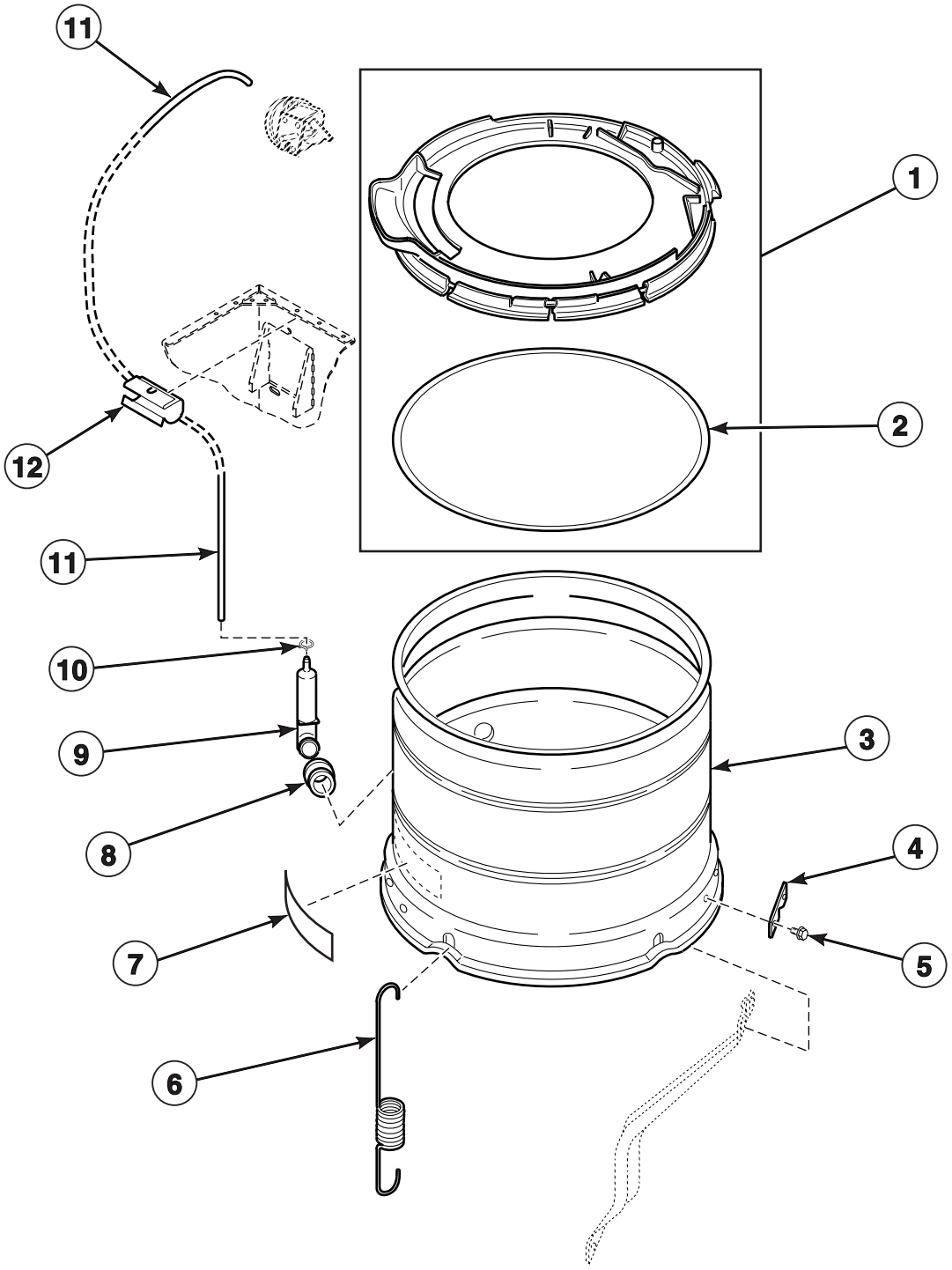

TLW1470P_37986

© Copyright, Alliance Laundry Systems LLC – DO NOT COPY or TRANSMIT

Outer Tub, Cover and Pressure Hose

REF	PART NO.	DESCRIPTION	COMMENTS
1	36025P	Outer Tub Cover Assembly	Includes item 2
2	32857	Gasket	
3	34438	Outer Tub	
4	27926	Leg Plate	
5	35369	Screw	
6	35948	Centering Spring	
7	500049	Sticker	
8	29175	Grommet	
9	30907	Pressure Bulb	
10	39282	Hose Clamp	
11	39125	Pressure Hose	
12	36985	Clip	

© Copyright, Alliance Laundry Systems LLC – DO NOT COPY or TRANSMIT

Transmission Assembly and Balance Ring

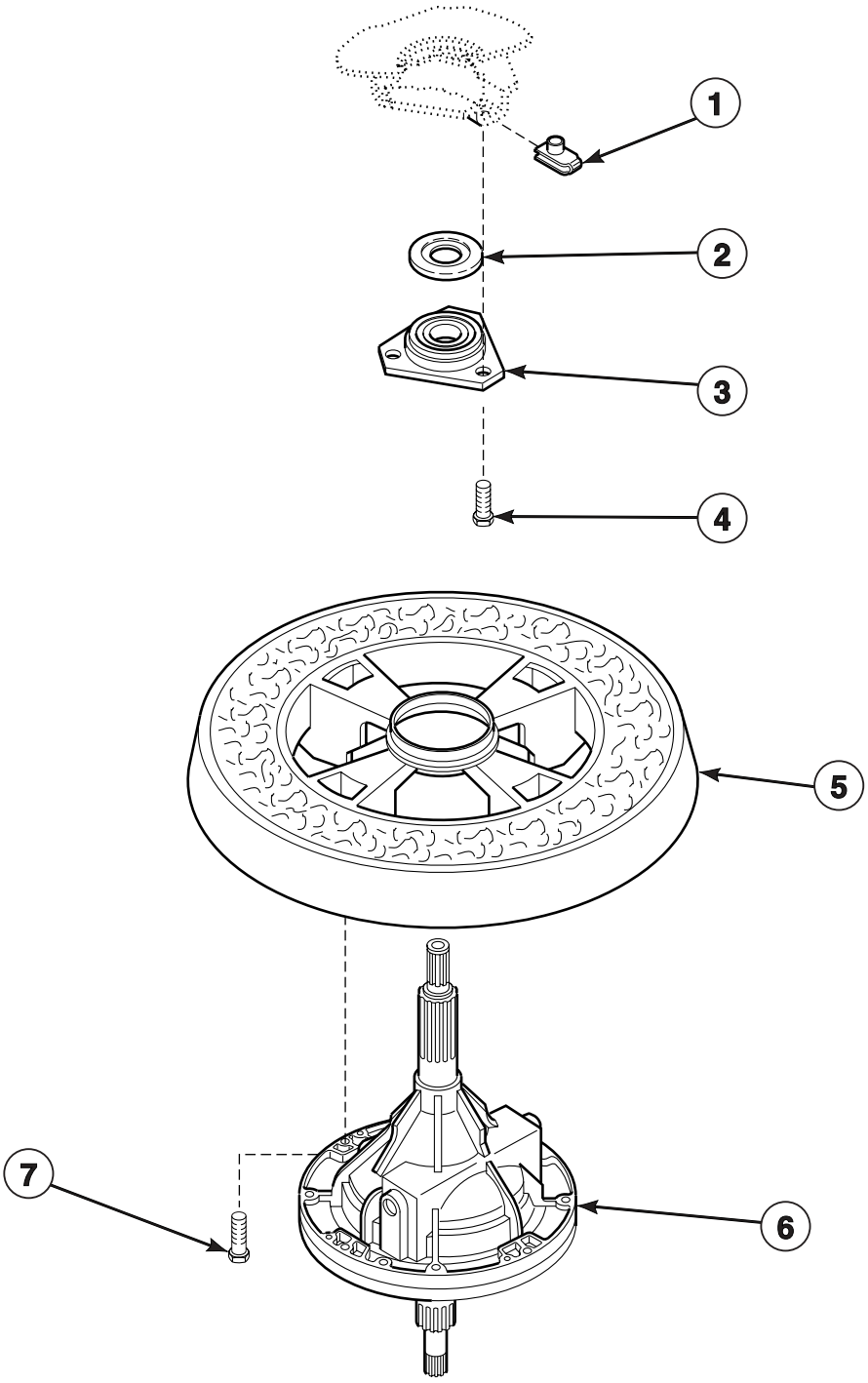

W234P_37986

© Copyright, Alliance Laundry Systems LLC – DO NOT COPY or TRANSMIT

Transmission Assembly and Balance Ring

REF	PART NO.	DESCRIPTION	COMMENTS
	27604P	Anti-Seize Compound	Apply to this area of both the upper and lower transmission tubes
1	27222	Retainer Nut	
2	27187	Flinger	Through Serial No. 9510053575
3	27182	Bearing Housing Assembly	
4	36991	Cap Screw	
5	34731	Balance Ring	
6	34526	Transmission Assembly	Refer to *Transmission Assembly* section for component parts
7	N/A	Cap Screw	

N/A = Part no longer available

© Copyright, Alliance Laundry Systems LLC – DO NOT COPY or TRANSMIT

Transmission Assembly

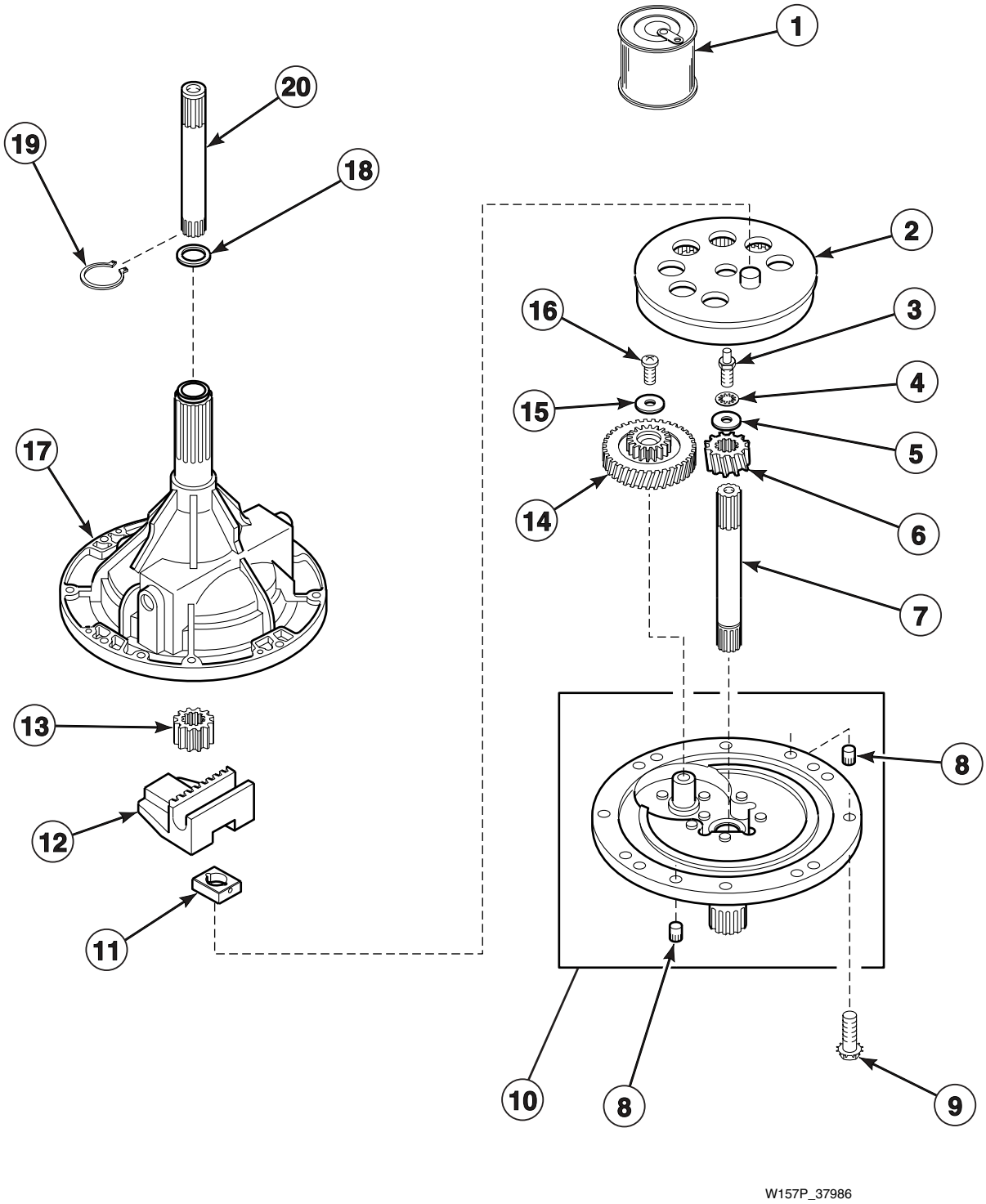

© Copyright, Alliance Laundry Systems LLC – DO NOT COPY or TRANSMIT

Transmission Assembly

REF	PART NO.	DESCRIPTION	COMMENTS
	37577	Sealant	Use between transmission case and cover
1	27243	Transmission Oil	1 fill
2	26577	Internal Gear	
3	27030	Special Screw	
4	21456	Lockwasher	
5	26509	Washer	
6	36562	Drive Pinion	
7	34853	Input Shaft	
8	27172	Dowel Pin	Through Serial No. 9604069377
9	32814	Screw	
10	38290	Transmission Cover Assembly	
11	26493	Slide	
12	31526	Rack	
13	27003	Agitator Pinion	
14	29161	Reduction Gear	
15	29260	Washer	
16	29273	Screw	
17	33223	Transmission Case Assembly	
18	35092	Washer	
19	27197	Retainer Ring	
20	36570	Output Shaft	

© Copyright, Alliance Laundry Systems LLC – DO NOT COPY or TRANSMIT

Drain Hose and Siphon Break Kit

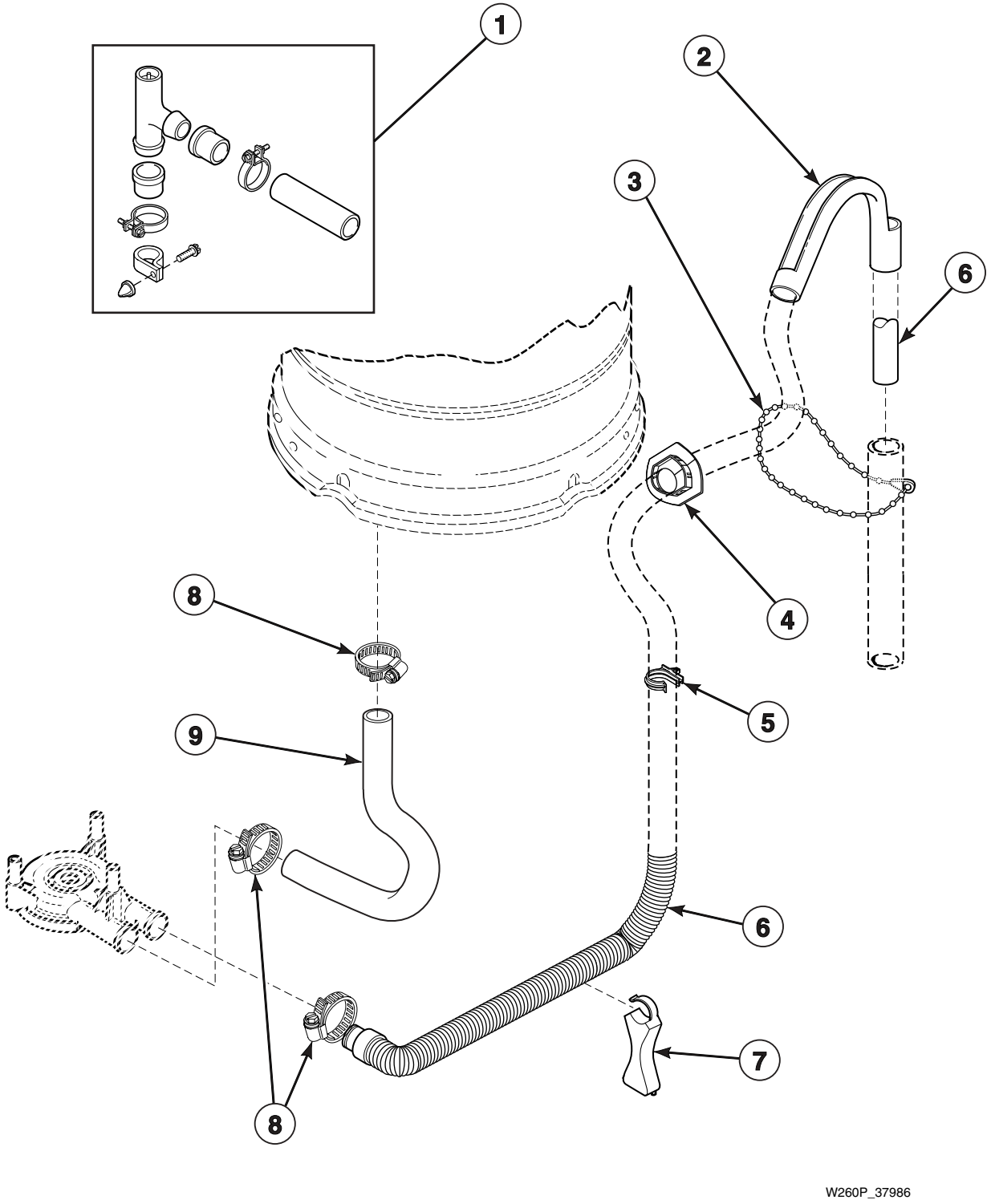

© Copyright, Alliance Laundry Systems LLC – DO NOT COPY or TRANSMIT

Drain Hose and Siphon Break Kit

REF	PART NO.	DESCRIPTION	COMMENTS
	406P3	Drain Extension Kit	Use with No. 20616 Drain Hose; Order by the foot, as required
1	562P3	Siphon Break Kit	Siphon break kit MUST be installed in drain hose if drain receptacle is lower than cabinet top of washer
2	33615	Drain Hose Sleeve	
3	33489	Beaded Tie Down Strap	
4	32219	Drain Hose Strain Relief	
5	36014	Hose Retainer Clip	
6	39950	Drain Hose	
7	36522	Hose Support	
8	36802	Hose Clamp	
9	35753	Tub-To-Pump Hose	

© Copyright, Alliance Laundry Systems LLC – DO NOT COPY or TRANSMIT

Bearing Housing, Brake, Pulley and Pivot Dome

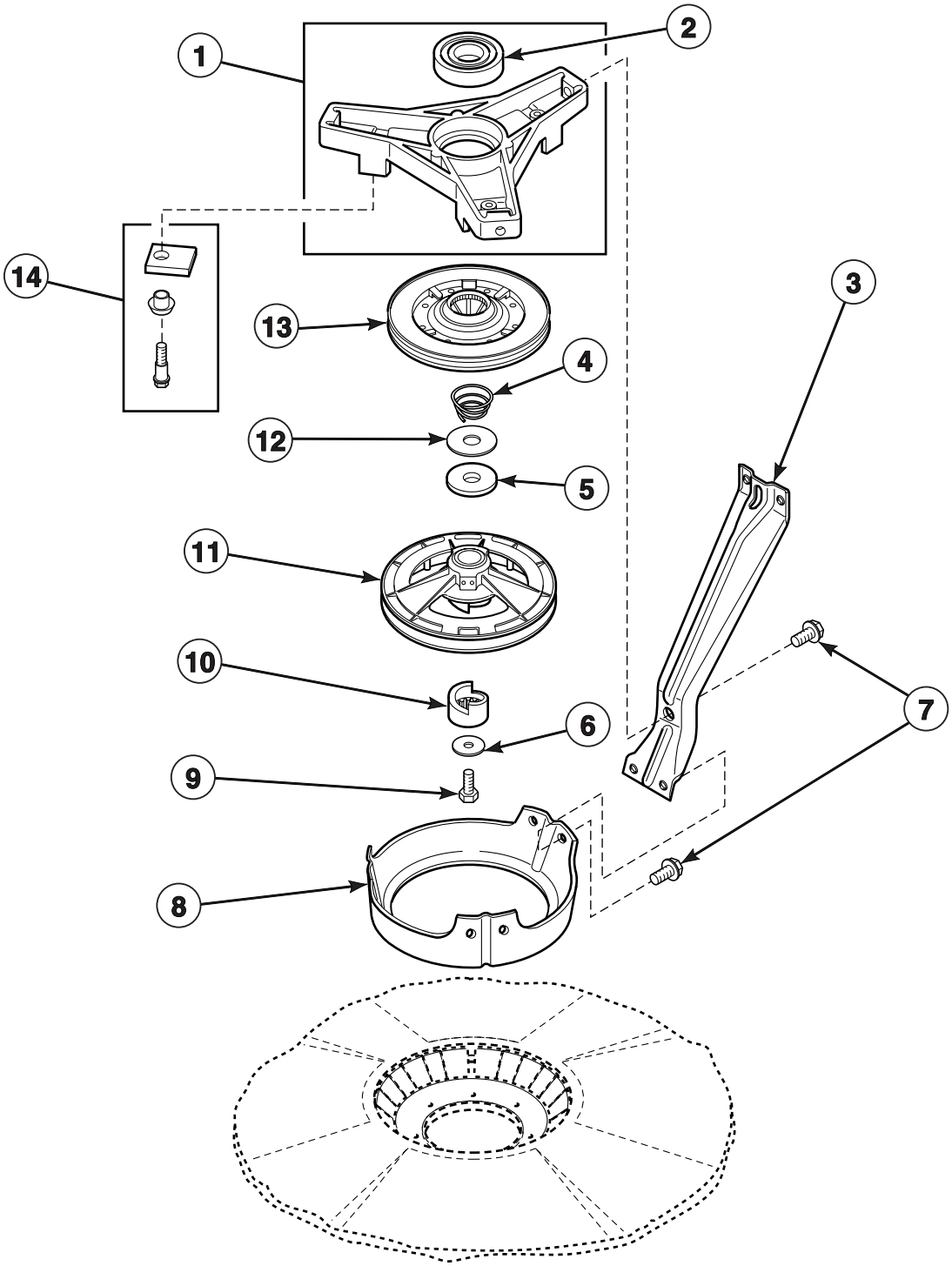

W164P_37986

© Copyright, Alliance Laundry Systems LLC – DO NOT COPY or TRANSMIT

Bearing Housing, Brake, Pulley and Pivot Dome

REF	PART NO.	DESCRIPTION	COMMENTS
	26594P	Silicone Lubricant	Apply small amount to each new brake pad
1	35746	Bearing Housing Assembly	
2	28944R	Bearing	
3	34471	Support Leg	
4	33435	Spring	Through Serial No. 9606029040
5	27015	Washer	Thick
6	26509	Washer	
7	35369	Screw	
8	34470	Pivot Dome	
9	27220	Screw	
10	27018	Helix	
11	35308	Pulley Assembly	
12	35535	Washer	Thin
13	38505P	Brake Assembly	
14	548P3	Brake Pad Kit	Includes three pads, sleeves and screws

© Copyright, Alliance Laundry Systems LLC – DO NOT COPY or TRANSMIT

Front Panel, Base Assembly and Cabinet Assembly

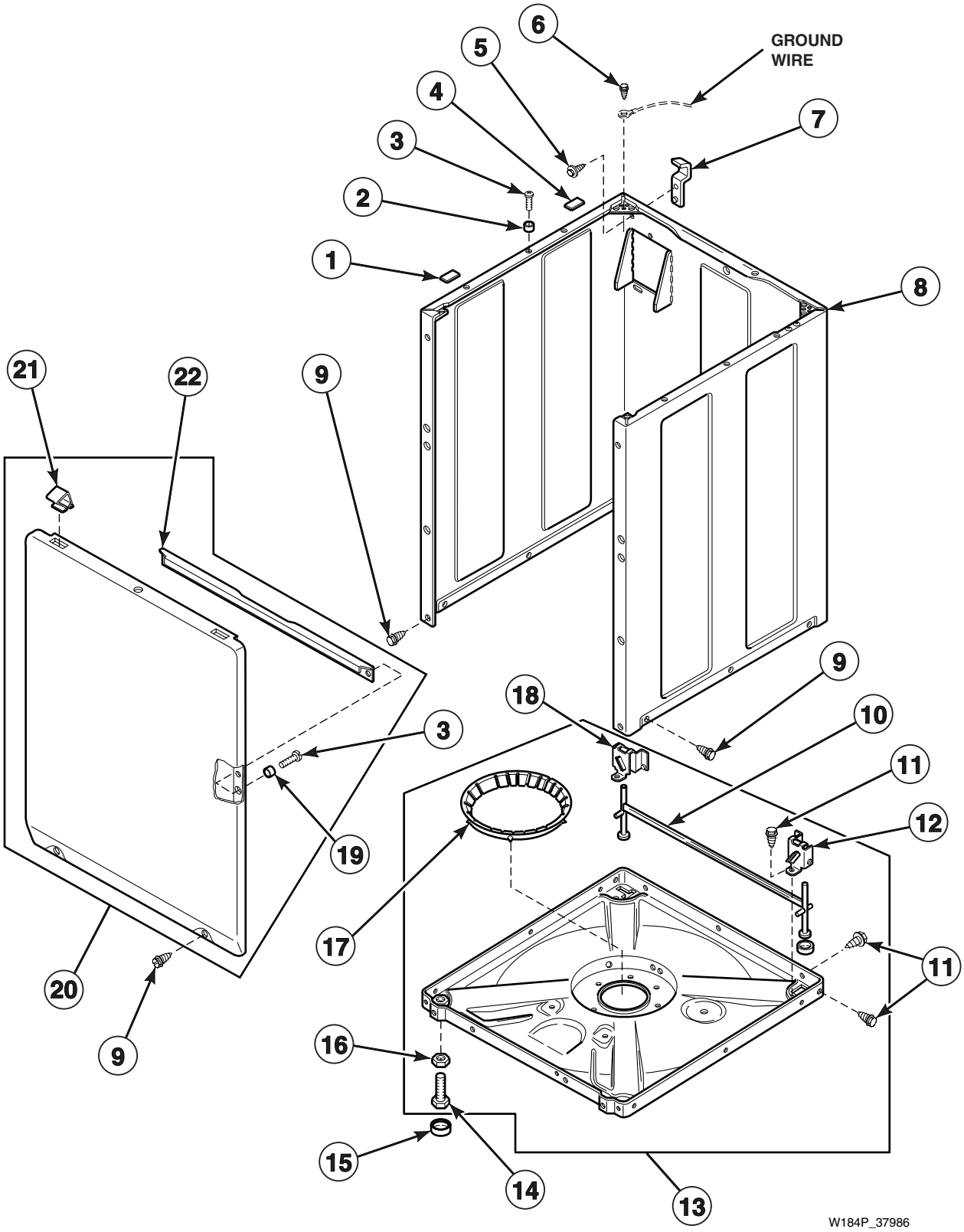

© Copyright, Alliance Laundry Systems LLC – DO NOT COPY or TRANSMIT

Front Panel, Base Assembly and Cabinet Assembly

REF	PART NO.	DESCRIPTION	COMMENTS
1	56128	Bumper Pad	Thin
2	56079	Guide Lug	
3	39733	Screw	
4	36226	Bumper Pad	Thick
5	35780	Screw	
6	23962	Screw	
7	27103	Hinge	
8	38612*P	Cabinet Assembly	
9	27196	Screw	
10	34443	Leveling Leg and Stabilizer Bar Assembly	
11	35148	Screw	
12	36036	Bracket	
13	36599P	Base Assembly	Includes items 10, 11, 12, 14, 16, 17, 18 and attaching hardware
14	34319	Leveling Leg	
15	34318	Rubber Foot	
16	21899	Locknut	
17	36108	Snubber Pad and Isolator Assembly	
18	36037	Bracket	Left
19	28102	Guide Lug	
20	34656*P	Front Panel	Includes items 21, 22 and attaching hardware
21	35865	Hold-Down Clip	
22	35097	Brace	

*** Add Letter To Designate Color. L - Almond W - White**

© Copyright, Alliance Laundry Systems LLC – DO NOT COPY or TRANSMIT

Mixing Valve and Motor Connection Blocks, Terminals and Terminal Extractor Tool

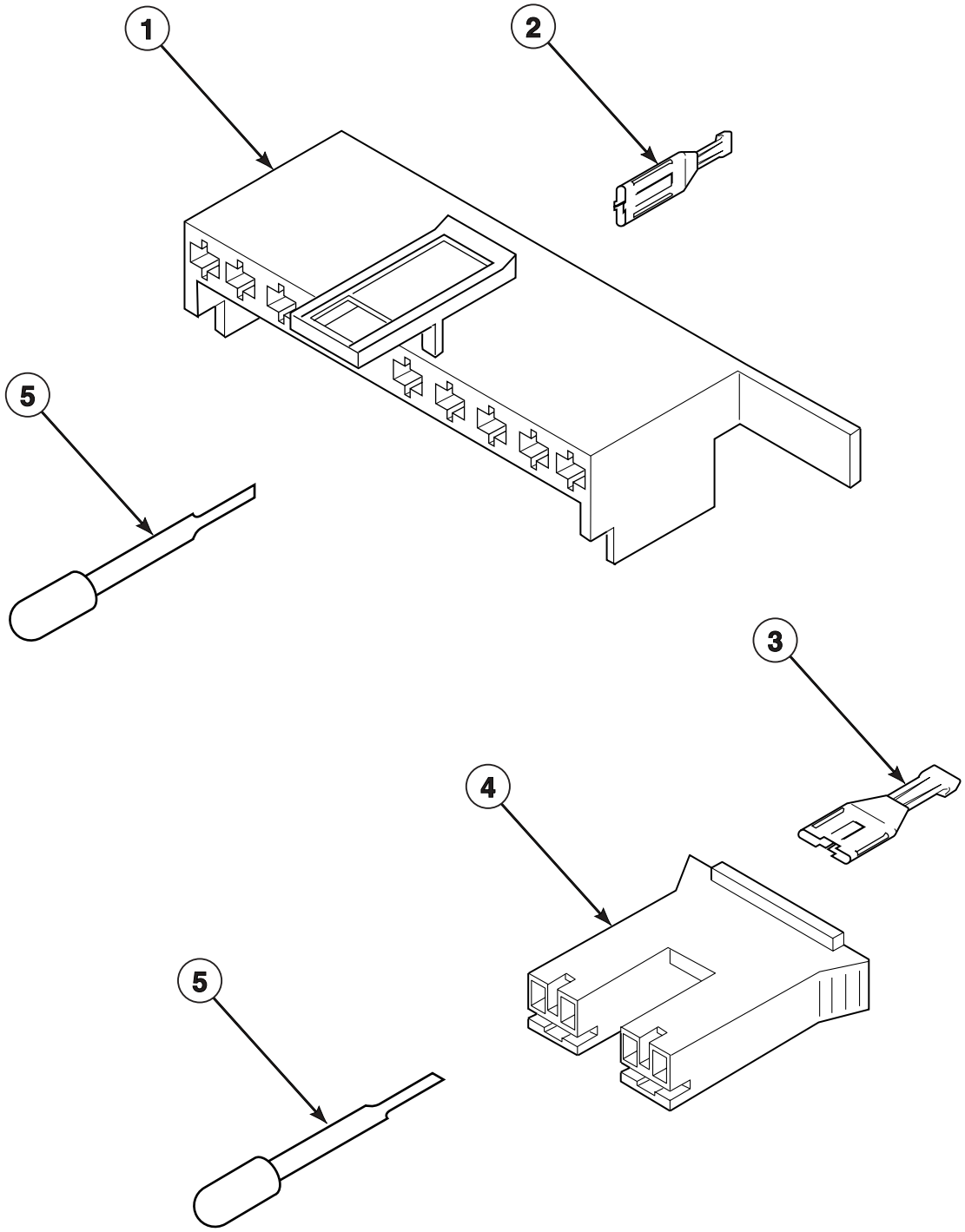

W134P_37986

© Copyright, Alliance Laundry Systems LLC – DO NOT COPY or TRANSMIT

Mixing Valve and Motor Connection Blocks, Terminals and Terminal Extractor Tool

REF	PART NO.	DESCRIPTION	COMMENTS
1	34677	Molex Housing	Motor
2	00188	Molex Terminal	For one or two wire application
3	00121	Spade Terminal	1/4 inch
4	34675	Mixing Valve Amp Housing	Natural
	34676	Mixing Valve Amp Housing	Red
5	283P4	Terminal Extractor Tool	

© Copyright, Alliance Laundry Systems LLC – DO NOT COPY or TRANSMIT

Power Cord and Terminals

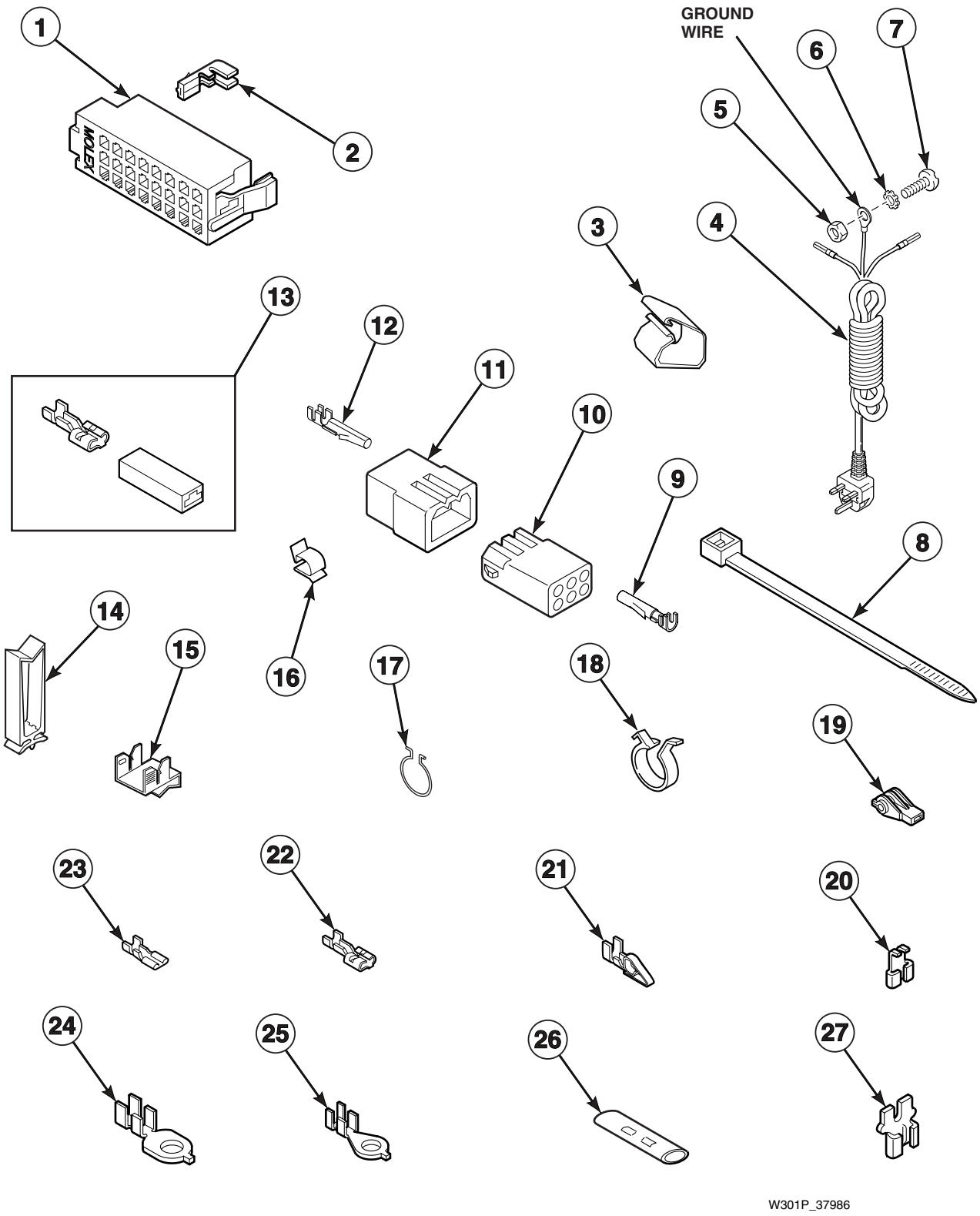

© Copyright, Alliance Laundry Systems LLC – DO NOT COPY or TRANSMIT

Power Cord and Terminals

REF	PART NO.	DESCRIPTION	COMMENTS
1	32746	Molex Housing	Right
	34123	Molex Housing	Left
2	00188	Molex Terminal	Used for one or two wire application
3	N/A	Harness Clip	
4	37179	Power Cord	
5	28447	Nut	
6	28449	Lockwasher	
7	28448	Screw	
8	55881	Wire Tie	
9	00117	Terminal	Female
10	26302	Terminal Block	1 circuit
	26708	Terminal Block	6 circuit
	26163	Terminal Block	9 circuit
11	26302	Terminal Block	1 circuit
	23041	Terminal Block	6 circuit
	23033	Terminal Block	9 circuit
12	00116	Terminal	Male
13	00234	Terminal and Housing Assembly	
14	36274	Harness Clip	
15	00161	Ground Clip	
16	21036	Cable Clip	
17	51291	Wire Clip	
18	504034	Wire Clip	
19	70210	Plastic Insulator	
20	00120	Right Angle	Flag terminal
21	N/A	Spade Terminal	Female; 1/4 inch
22	00223	Spade Terminal	Large spade
23	00112	Spade Terminal	Small spade
24	00113	Eyelet Terminal	1/4 inch ring
25	00110	Eyelet Terminal	Small shank
26	21091	Connector	
27	29673	Double Connector	

N/A = Part no longer available

© Copyright, Alliance Laundry Systems LLC – DO NOT COPY or TRANSMIT

Special Tools

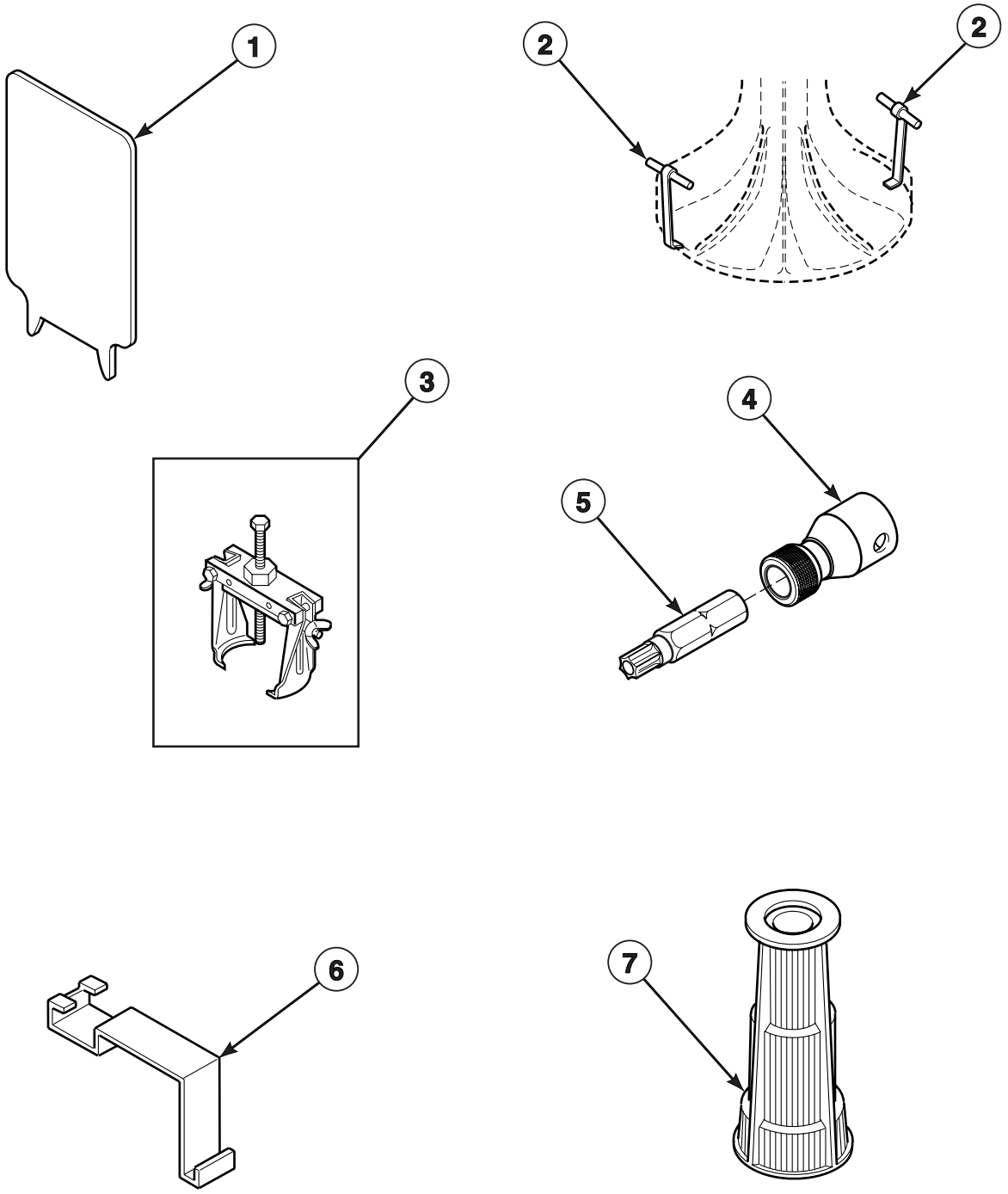

W279P_37986

© Copyright, Alliance Laundry Systems LLC – DO NOT COPY or TRANSMIT

Special Tools

REF	PART NO.	DESCRIPTION	COMMENTS
	725P3	Tool Kit	Includes items 2, 5, 6 and 7
1	272P4	Lid Switch Tool	Use for installing lid switch for models using 33440 Switch Holder
2	254P4	Agitator Hooks	Set of two; Use to remove agitator from drive bell
3	294P4	Bell Tool	Replaces bell tool, Part No. 253P4; For removal and installation of drive bell to transmission shaft
	294P4A	Drive Bell Arms	To update 253P4 Bell Tool
	294P4B	Drive Bell Bolt	To update 253P4 Bell Tool
4	24161	Torx Bit Holder	3/8 inch Drive; For removal and installation of shield to cabinet top and pump attaching screws
5	282P4	Tamper Resistant Bit	T25; For removal and installation of shield to cabinet top and pump attaching screws
6	273P4	Outer Tub Cover and Gasket Tool	Use to remove 36025P Outer Tub Cover from Outer Tub and to install 32857 Gasket in outer tub cover
7	293P4	Seal Tool	For installation of 36425 Seal

© Copyright, Alliance Laundry Systems LLC – DO NOT COPY or TRANSMIT

Special Tools

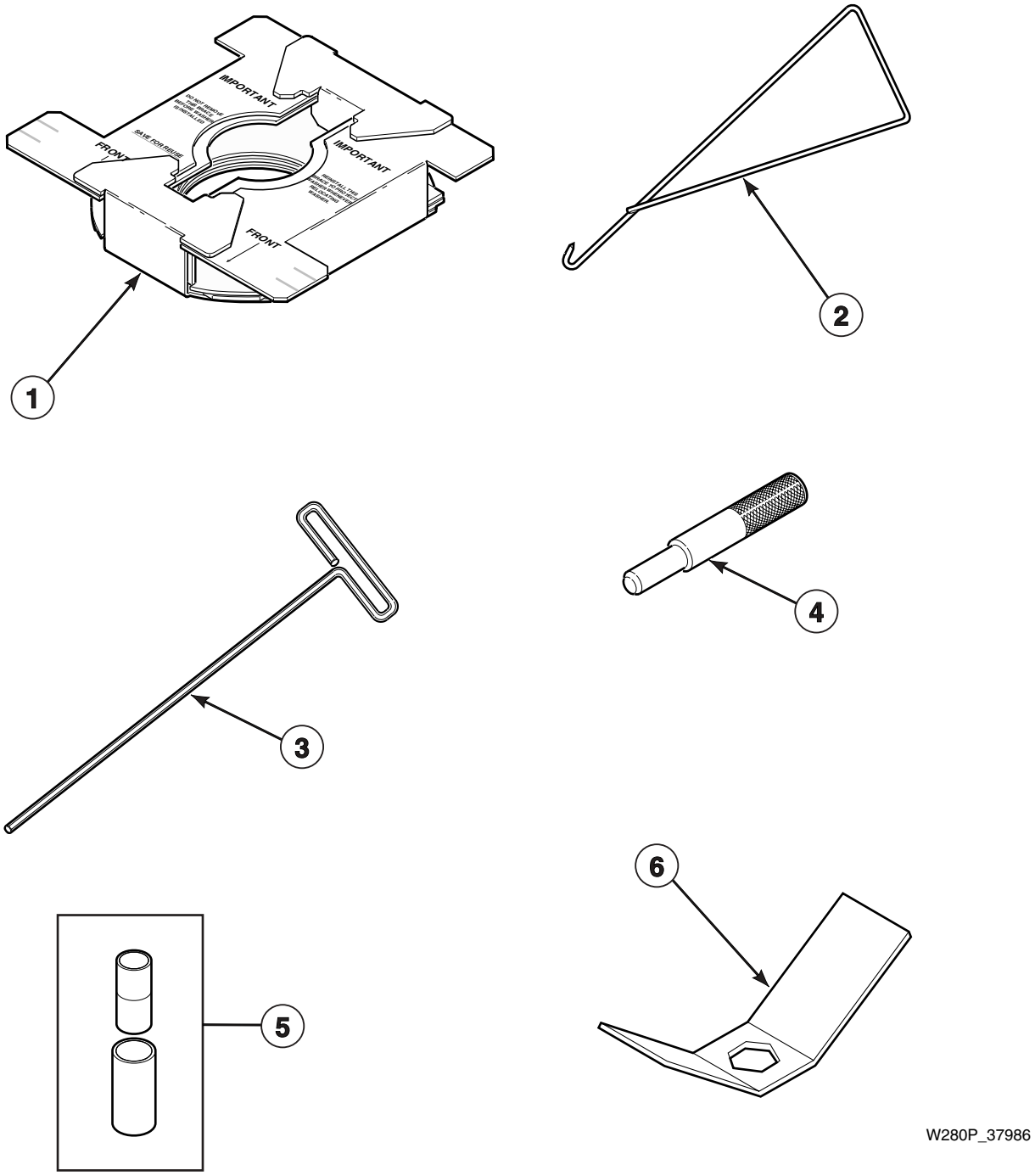

© Copyright, Alliance Laundry Systems LLC – DO NOT COPY or TRANSMIT

Special Tools

REF	PART NO.	DESCRIPTION	COMMENTS
1	N/A	Washer Shipping Brace	Install whenever moving washer; Remove before use
2	321P4	Spring Hook	For removal of centering springs from outer tub
3	291P4	T-Handle Allen Wrench	For the removal and installation of the three pump assembly attaching screws
4	305P4	Guide Tool	Two required; Use guide pins in place of dowel pins when reassembling transmission cover and case
5	242P4	Brake Spring Installer	For installing brake spring
6	306P4	Hex Wrench	For removal of locknut from washtub hub

N/A = Part no longer available

© Copyright, Alliance Laundry Systems LLC – DO NOT COPY or TRANSMIT

Wire Harnesses and Wires

PART NO.	DESCRIPTION	COMMENTS
N/A	Cabinet Top Harness	
37021	Hood Harness	
31973	Lid Lock Harness	
45001	18 Gauge Wire	Black; Order wire by foot and terminals and connectors as required
45380	12 Gauge Wire	Orange; Order wire by foot and terminals and connectors as required

N/A = Part no longer available

NOTE: Individual wires are not available separately. Order complete wire harness, or order wire by the foot. When applying terminals to wires, it is recommended that the terminals be soldered to the wires.

© Copyright, Alliance Laundry Systems LLC – DO NOT COPY or TRANSMIT

Parts Index

A

Actuator Arm
33441 9
Agitator
33174 21
Agitator Hooks
254P4 39
Agitator Pinion
27003 27
Anti-Seize Compound
27604P 25

B

Backflow Preventer
34500 17
Balance Ring
34731 25
Base Assembly
36599P 33
Beaded Tie Down Strap
33489 29
Bearing
28944R 31
Bearing Housing Assembly
27182 25
35746 31
Bell Tool
294P4 39
Belt
35517 11
Bleach Dispenser
34776 7
Brace
35097 33
Bracket
36036 33
36037 33
502589 15
Brake Assembly
38505P 31
Brake Pad Kit
548P3 31
Brake Spring Installer
242P4 41
Bumper
21685 7
Bumper Pad
36226 33
56128 33
Bushing
33446 7

C

Cabinet Assembly
38612*P 33
Cabinet Top
37071* 7
Cable Clip
21036 37
Cap Screw
27202 21
36991 25
Centering Spring
35948 23
Clip
28849 11
36985 23
Clothes Guard
35035 21
Connector
21091 37
Control Hood Assembly
31811 5
37845 5
Control Hood Rear Panel
37782 5
Control Knob
33688 5
Cover Plate
37828 7

D

Director Bracket
36034 7
Double Connector
29673 37
Dowel Pin
27172 27
Drain Extension Kit
406P3 29
Drain Hose
39950 29
Drain Hose Sleeve
33615 29
Drain Hose Strain Relief
32219 29
Drive Bell
39508 21
Drive Bell Arms
294P4A 39
Drive Bell Bolt
294P4B 39
Drive Pinion
36562 27

E

End Cap
31248 5
31249 5
Eyelet Terminal
00110 37
00113 37

© Copyright, Alliance Laundry Systems LLC – DO NOT COPY or TRANSMIT

F

Fabric Softener Dispenser
36542 21

Fill Hose
38155 17

Flinger
27187 25

Front Panel
34656*P 33

Fuse
502592 15
502593 15

Fuse Holder Body
502591 15

Fuse Holder Cap
502811 15

G

Gasket
28094 21
29677 7
30378 7
32857 23
34338 7

Grommet
29175 23
80262 ..... 7, 13

Ground Clip
00161 37

Guide Lug
28102 33
56079 33

Guide Tool
305P4 41

H

Harness Clip
36274 37

Helix
27018 31

Hex Wrench
306P4 41

Hinge
27103 33
36437 7
36438 7

Hold-Down Clip
35865 33

Hood Harness
37021 42

Hose Clamp
29210 17
36801 17
36802 29
39282 23

Hose Retainer Clip
36014 29

Hose Support
36522 29

Hose Washer
20290 17

Hub and Seal Kit
495P3A 21

I

Idler Lever
37443 11

Idler Lever Spring
37606 11

Idler Pulley
28800 11

Idler Shaft
28802 11

Indicator Light
36968 5

Inlet Hose Assembly
37380 17
37381 17
38349P 17

Inlet Screen
F270200 19

Input Shaft
34853 27

Internal Gear
26577 27

K

Knurled Nut
24206 5

L

Latch
29674 7

Leg Plate
27926 23

Leveling Leg
34319 33

Leveling Leg and Stabilizer Bar Assembly
34443 33

Lever
33442 9

Lid Lock
29678 7

Lid Lock Control
37269 5

Lid Lock Harness
31973 42

Lid Switch Tool
272P4 39

Lint Filter
39371 21

Loading Door
33552* 7

Locknut
21899 33
29220 21

© Copyright, Alliance Laundry Systems LLC – DO NOT COPY or TRANSMIT

Lockwasher
21456 27
21734 5
25820 5
28449 ..... 5, 37

M

Mixing Valve Amp Housing
34675 35
34676 35
Mixing Valve Assembly
37061 19
Mixing Valve Mounting Bracket
39407 17
Molex Housing
32746 37
34123 37
34677 35
Molex Terminal
00188 ..... 35, 37
Motor Assembly
37058 11
Motor Mount
34788 11
Motor Mount Post
34791 11
Motor Shield
34754 11
36965 11
Motor Switch
35632 11

N

Nut
02788 5
22001 7
28447 ..... 5, 37
28803 11
35423 11
52566 11
52947 5
57584 5

O

O-Ring
36472 21
Outer Tub
34438 23
Outer Tub Cover and Gasket Tool
273P4 39
Outer Tub Cover Assembly
36025P 23
Output Shaft
36570 27

P

Pivot Dome
34470 31
Plastic Insulator
70210 37
Plate
29676 7
Plug
36511 21
Power Cord
37179 37
Pressure Bulb
30907 23
Pressure Hose
39125 23
Pressure Switch
39203 5
Pulley Assembly
35308 31
Pump Assembly
36863 11
Push-To-Start Switch
55882 5

R

Rack
31526 27
Reduction Gear
29161 27
Relay
37055 13
502501 ..... 5, 13
Retainer Nut
27222 25
Retainer Ring
23748 11
27197 27
Right Angle
00120 37
Rubber Foot
34318 33

S

Screw
Q6516 5
Q6695 7
20530 13
22649 7
23962 ..... 5, 9, 33
27196 33
27220 31
28448 ..... 5, 37
29273 27
31260 5
31752 5
32184 7
32814 27
32993 5
33562 ..... 7, 17

© Copyright, Alliance Laundry Systems LLC – DO NOT COPY or TRANSMIT

34337 7
34565 11
35148 33
35369 ..... 23, 31
35527 7
35780 33
36510 9
36639 11
39733 33
501086 ..... 5, 13, 17
503661 ..... 11, 13
52909 ..... 7, 13

Seal
36425 21

Seal Tool
293P4 39

Sealant
37577 27

Shield
39744 7

Shoulder Bolt
27229 11

Shoulder Screw
39432 21

Silicone Lubricant
26594P 31

Siphon Break Kit
562P3 29

Slide
26493 27

Snubber Pad and Isolator Assembly
36108 33

Spade Terminal
00112 37
00121 35
00223 37

Special Screw
27030 27

Splined Insert
29728 21

Spring
33435 31
33443 9

Spring Hook
321P4 41

Sticker
36592 7
500049 23
502506 11
502511 ..... 5, 13

Strain Relief
36957 5

Support
501523 5
56534 7

Support Leg
34471 31

Switch
33445 9

Switch Holder Kit
36497P 9

T

Tamper Resistant Bit
282P4 39

Temperature Switch
21300 5
35115 5

Terminal
00116 37
00117 37

Terminal and Housing Assembly
00234 37

Terminal Block
23033 37
23041 37
26163 37
26302 37
26708 37
36841 5

Terminal Extractor Tool
283P4 35

T-Handle Allen Wrench
291P4 41

Timer
36989 5

Timer Knob
33897 5
33898W 5

Timer Knob Skirt
33817 5

Tool Kit
725P3 39

Torx Bit Holder
24161 39

Transformer
M412477 13

Transmission Assembly
34526 25

Transmission Case Assembly
33223 27

Transmission Cover Assembly
38290 27

Transmission Oil
27243 27

Tub-To-Pump Hose
35753 29

W

Washer
21643 7
26509 ..... 27, 31
27015 31
29260 27
29443 11
35092 27
35535 31
52549 11
81392 11

Washtub
39240P 21
719P3 21

© Copyright, Alliance Laundry Systems LLC – DO NOT COPY or TRANSMIT

Wire Clip
504034 37
51291 37
Wire Tie
55881 37
Wire, 12 Gauge
45380 42
Wire, 18 Gauge
45001 42

© Copyright, Alliance Laundry Systems LLC – DO NOT COPY or TRANSMIT